WIDEBAND CROSSTALK INTERFERENCE CANCELLING ON xDSL USING ADAPTIVE SIGNAL PROCESSING AND COMMON MODE SIGNAL

A. Homayoun Kamkar-Parsi, Gilles Bessens, Martin Bouchard and Tet H. Yeap
School of Information Technology and Engineering, University of Ottawa,
800 King Edward, Ottawa (Ontario), K1N 6N5, Canada, e-mail: bouchard@site.uottawa.ca

ABSTRACT

Crosstalk originating from multiple high-speed data services in the same telephone bundle is a limiting factor for the maximum bit rate, the loop length and the number of data services that a bundle can support. Due to the nature of twisted-pairs, external interferences (including crosstalk) mostly couple to the twisted-pair line in common mode, and then leaks to differential mode due to line imperfect balance. The result is a degradation of the received differential signal quality. This paper uses the common mode signal as a reference to an adaptive wideband crosstalk canceller, as an attempt to remove the effect of crosstalk on the differential signal. Simulation results show the potential benefits of using this technique to reduce the crosstalk levels.

1. INTRODUCTION

As high-speed data services become more in demand, the same cable bundle will have to carry an increasing number of active lines, and crosstalk will grow to be a more significant issue. With architectures such as Fiber-to-the-Curb, the density of lines in the remote cabinets will also be higher than the classical density found in the Central Offices (CO), thus increasing the crosstalk problem. This paper offers a possible solution to mitigate crosstalk impairments. In some instances, there is a high density of DSL lines in a bundle and the twisted-pair lines cannot be properly isolated from each other. There is therefore a high level of crosstalk between the lines. This crosstalk can include interferers from the same DSL technology or mixed technologies such as ADSL, HDSL, SHDSL, T1 (DS1) and possibly VDSL in the near future. Most of these technologies share an overlapping frequency spectrum, leading to the corruption of the transmitted signal in a line, and limiting the maximum bit rate and loop length.

In DSL, the high-speed data transmission is over standard copper twisted-pair telephone wires called Tip and Ring wires. The signal is received in differential mode, which is the difference between the Tip and Ring signals, both respectively measured to ground, and ideally having equal but inverted voltage amplitudes. The crosstalk interference couples to the twisted pair mostly in common mode, which is the mode that describes how the signals propagate down both lines, with equal strength and the same polarity on both lines. The common mode signals then partially leak to (and corrupt) the differential mode signal, because of the actual physical line impairments. This paper proposes an adaptive filtering technique using the common mode signal as a reference to reduce the wideband crosstalk that was induced into the useful differential signal. Previous work had been done using the common mode signal as a reference to reduce narrow band RFI (Radio Frequency Interference) in the useful differential signal [1,2]. The differences between the work in [1,2] and this paper are primarily the interference taken into consideration (RFI vs. crosstalk), the modulation technique used to transmit the useful signal (CAP/QAM vs DMT) and a narrowband cancellation vs. a wideband cancellation technique. In Section 2 of this paper, the architecture of an ADSL implementation with an adaptive crosstalk canceller using the common mode signal is described. Section 3 covers the signal propagation model in differential and common modes, identifies the impairments caused by two types of crosstalk, namely FEXT and NEXT, and covers how the common and differential mode crosstalk signals were modeled. Section 4 shows, through simulation results, that the proposed adaptive crosstalk canceller can significantly reduce the error rates before and after error correction.

This work was supported by Bell Canada and by the National Science and Engineering Research Council (NSERC), Canada

2. ADSL STRUCTURE WITH ADAPTIVE CROSSTALK CANCELLER

For this paper, ADSL with a crosstalk canceller using the common mode signal has been simulated, as in Fig. 1. ADSL uses the Discrete Multi-Tone (DMT) modulation technique. An ADSL DMT transmitter partitions its channel's bandwidth into narrow (4.3 kHz) equally spaced subchannels, each with identical bandwidth but with different center frequencies. Each subchannel is characterized by a SNR, and therefore, according to Shannon's theory, can support a certain maximum number of bits, which are QAM encoded subsymbols. The group of

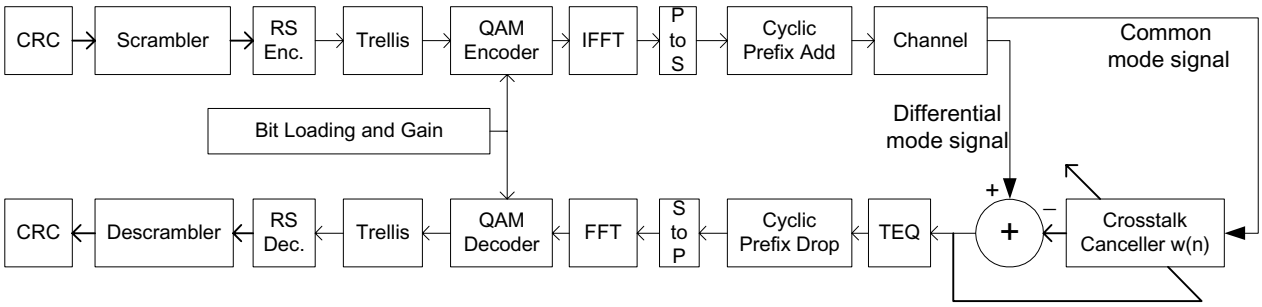

Fig. 1. ADSL structure with crosstalk canceller

subsymbols is then fed to an IFFT modulator, which creates a sum of carriers, each modulated by its own phase and amplitude. The output of the IFFT modulator is then serialized and a cyclic prefix is added to each IFFT output in order to mitigate the inter-symbol interference between IFFT symbols. At the receiver end, the reciprocal steps are taken to demodulate the data after the channel equalization (TEQ) has been performed. The Reed-Salomon (RS) block performs forward error correction (FEC) on the data, and the optional trellis encoder can also be used to increase the coding gain, allowing higher bit loads at lower SNRs. The adaptive canceller *w(n)* using the common mode signal as a reference input is shown in Fig. 1, and it will be explained in more detail in the following sections.

3. THE ADSL CHANNEL AND ITS IMPAIRMENTS

The ADSL signal is transmitted in differential mode over the copper twisted-pair line. Differential mode transmission is when the two wires, named Tip and Ring, and both respectively measured to ground, have equal but inverted voltage amplitudes. Without any noise effect, the common mode signal, being the sum of the Tip and Ring wires, would yield a null voltage level. But the two wires are twisted to allow any external noise to couple with the line equally on both Tip and Ring, resulting in an unchanged differential mode signal, but with a non-null common mode signal. In reality, the lines are not perfectly balanced, causing the common mode signal to leak into (and corrupt) the differential mode (and vice-versa, but the differential mode signal leaking to the common mode can be neglected, because it is typically weaker than the common mode signal). The differential mode crosstalk noise can be modeled and predicted if the common mode signal is measured. By using adaptive filtering with the common mode signal as a reference, most of the crosstalk noise corrupting the differential mode signal can effectively be reduced. In this paper, the considered crosstalk noise is from other services in the same bundle.

By definition, crosstalk interference is due to adjacent lines in a bundle that are improperly shielded from each other, and therefore the signals (considered as noise) from other lines are electro-magnetically coupled to the considered line and cause interference. Crosstalk can be separated into two categories: NEXT (Near-End Crosstalk) and FEXT (Far-End Crosstalk). NEXT occurs when a receiver detects other signals in the same bundle from transmitters that are located in proximity, while FEXT occurs when the other detected signals are from remote transmitters, located at the other end of the bundle. FEXT and NEXT become problematic when they are in an overlapping frequency band with the considered signal. The following equations determine the level of interference in the received differential mode signal due to NEXT and FEXT, respectively, for a binder containing fifty category 3 twisted-pairs. The NEXT/FEXT coupling equations are [3]:

$$PSD_{NEXT} = PSD_{Disturber} \cdot (\frac{N}{49})^{0.6} \cdot 10^{-13} \cdot f^{1.5} \quad (1)$$

$$PSD_{FEXT} = PSD_{Disturber} |H(f)|^2 (\frac{N}{49})^{0.6} \cdot 9 \cdot 10^{-20} \cdot d \cdot f^2 \quad (2)$$

with:

d: loop length (in feet)

f: frequency (in Hz)

H(f): differential channel transfer function for the considered line

N: number of crosstalkers, with the considered power spectrum density (PSD) disturber

$PSD_{Disturber}$: PSD of an adjacent transmitter for NEXT, and remote transmitter for FEXT, both in differential mode.

When considering more than one type of disturber, the overall interference caused by each type of disturber must be combined. There are several techniques to combine mixed PSD crosstalkers from mixed sources [4]. For the simulation, each type of PSD crosstalker has been generated into a time domain signal and then summed to generate the overall interference. A standard two-port model has been used for the Category 3 copper twisted-pair transmission line, including bridge taps (which cause reflections on the line) [3]. A two-port model for the common mode propagation is not readily available; consequently the differential model parameters had to be adapted as in [5], to generate the common mode transmission model.

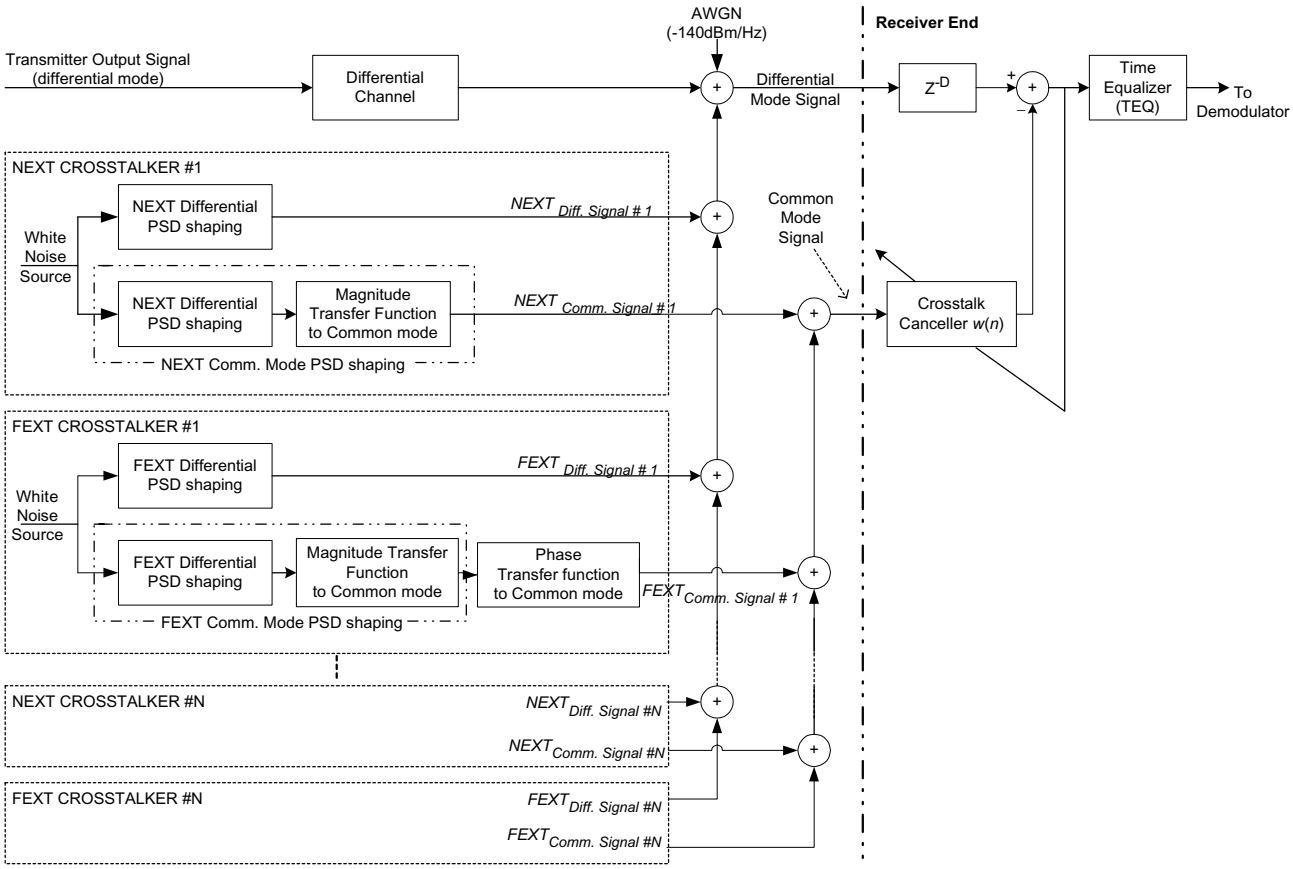

Fig. 2. ADSL with crosstalk canceller using a common mode reference signal

A common mode crosstalk noise model is also not readily available. It was implemented as in Fig. 2, based on the differential mode crosstalk model. Each type of crosstalker generates both NEXT and FEXT noise signals. Each NEXT or FEXT noise signal appears in both differential and common modes. $NEXT_{Diff.Signal}$ is generated using a shaping filter to yield a noise signal with the desired differential mode PSD of NEXT given by (1). $NEXT_{Comm.Signal}$ is generated by the same shaping filter used for the differential mode, combined with a zero phase differential to common mode magnitude scaling function (corresponding to the line unbalance factor). According to [3], the magnitude of the unbalance factor (which appears in Fig. 2 as the *Magnitude Transfer Function to Common Mode*, or *MTFCM*(*f*)) is taken to be:

$$MTFCM(f) = \begin{cases} \sqrt{10^5} & 0 < f \le 150\ kHz \\ \sqrt{10^5 \cdot \left(150khz/f\right)^{1.5}} & 150kHz \le f \le 30\ MHz \end{cases} \quad (3)$$

To generate both FEXT signals, namely $FEXT_{Diff.Signal}$ and $FEXT_{Comm.Signal}$, the same technique was implemented as for NEXT signals, with the differences that the PSD of FEXT is given by (2), and that in practice the common mode propagation is slower than the differential mode propagation [5], so the *Phase Transfer Function to Common Mode* was introduced in Fig. 2 to model this effect. This transfer function is calculated by taking the phase difference between the common mode and the differential mode transfer functions, calculated from the two-port models. This corresponds to the velocity difference between the crosstalk noise signals traveling in differential mode and in common mode. It affects only FEXT noise signals, since NEXT noise signals do not propagate through the channel. The model in Fig. 2 is scalable for different types of crosstalkers (mixed technologies) present in a bundle. The sum of all the common mode noise signals of FEXT and NEXT ($FEXT_{Comm.Signals}$ and $NEXT_{Comm.Signals}$) from all the different types of crosstalkers located in the bundle is therefore the single common mode reference signal used by the adaptive crosstalk canceller *w(n)*.

4. SIMULATIONS OF THE CROSSTALK CANCELLER USING THE COMMON MODE SIGNAL

The combination of Fig. 1 and Fig. 2 was simulated using Matlab™. The bit loading algorithm used is a derivative of the one found in [6]. The delay Z^{-D} (Fig. 2) is required to force the solution of the adaptive filter to be causal (the

delay is required because of the compensation of the *Phase Transfer Function to Common Mode* filter). The adaptive noise canceller *w(n)* was implemented using a basic NLMS algorithm [7], with 50 coefficients, and a causality delay of 30 samples. The simulated bundle contains fifty 24-gauge twisted-pairs, except for the upstream scenario which used fifty 26-gauge twisted pairs, both of which are non-loaded (no coils). Crosstalkers generated FEXT and NEXT noise signals, and additive white Gaussian noise (AWGN) of -140 dBm/Hz (single-sided) were added at the receiver. The adaptive crosstalk canceller was trained until it had reached a selected convergence factor, where the convergence factor is defined here as the power ratio of the initial FEXT+NEXT levels, over the FEXT+NEXT components not removed by the canceller. The efficiency of the adaptive crosstalk canceller using the common mode signal was measured by comparing the resulting bit error rate (without FEC error correction) and byte error rate (after the byte-based RS FEC, thus including error correction) for two scenarios, and for different convergence factors. The (constant) RS error correction scheme used in the simulations can correct bit error rates up to 10^{-3} (before any error correction and depending on the noise statistics), similar to the ADSL standard [8], where the exact amount of overhead and codeword length depends on several factors, including transmission direction and target bit rate.

Tables 1 and 2 show the results for one downstream scenario (canceller located on the client side) and one upstream scenario (canceller located on the CO side). In both cases, the crosstalk canceller was able to reduce the bit error rate to a level where the error correction scheme could remove the remaining byte errors. The sign "-" is indicated in the tables when the adaptive filter could not reach the specified target convergence. The explanation for this limitation on the convergence is that in the case of different crosstalk sources traveling through different paths and having different power levels at the receiver, the crosstalk canceller using one single common mode signal as an input reference can only converge to minimize the most energetic crosstalk source down to the level of the second most powerful source.

Table 1 Crosstalk canceller results for 6 Mb/s FDD-ADSL, with 9kft, considered crosstalk is NEXT and FEXT from 2 FDD-ADSL, 2 HDSL, and 1 ISDN-BRA.

Canceller	Bit error rate (without FEC)	byte error rate (with FEC)
Off (Reference)	1.2e-1	82%
20db convergence	6.2e-5	0%
25db convergence	-	-

Table 2 Crosstalk canceller results for 960 kb/s Upstream FDD-ADSL (Customer to CO), with 9kft , considered crosstalk is NEXT and FEXT from 20 FDD-ADSL, 3-ISDN-BRA, 2 HDSL-2, 5 SHDSL

Canceller	bit error rate (without FEC)	byte error rate (with FEC)
Off (Reference)	9.4e-3	8%
25db convergence	6.5e-4	0%
30db convergence	-	-

5. CONCLUSION

In this paper, a crosstalk canceller using the common mode signal as an input was proposed to reduce the crosstalk in a differential signal, and was simulated for an ADSL link. It was shown through simulations that the technique was beneficial to the differential signal quality, and consequently the error rates (with and without FEC) were lowered. Alternatively, for adaptive DSL systems, the throughput or the loop reach of the systems could also be improved with such a canceller. The proposed crosstalk canceller was simulated for ADSL, but it is not limited to this specific implementation of DSL. It thus seems to be an interesting option to mitigate crosstalk problems in practical implementations of future generations of DSL. As the next step, experimental measurements of differential and common mode signals including crosstalk and noise signals should be performed to validate the performance of the proposed canceller.

6. REFERENCES

[1] T.H. Yeap, D.K. Fenton and P.D. Lefebvre, "A novel common-mode noise cancellation technique for VDSL applications", *IEEE Trans. on Instrumentation and Measurement*, vol. 52, pp. 1325 -1334, Aug. 2003

[2] T. H. Yeap and P. Lefebvre, "Adaptive Multiple-Subband Common-mode RFI Suppression," U.S. Patent Number 6052420.

[3] T. Starr, J. M. Cioffi, and P. Silverman, *Understanding Digital Subscriber Line Technology*, Prentice-Hall, Upper Saddle River, 1999.

[4] S. Galli, K. J. Kerpez, "Methods of Summing Crosstalk From Mixed Sources - Part I: Theoretical Analysis," *IEEE Transactions on Communications*, vol. 50, pp. 453-461, March 2002

[5] R.A Combellack, "Improving Range and Bandwidth of Telco Loop Plant," *Proceedings of International Wire and Cable Symposium Proceedings*, Ottawa, Ontario, pp. 176-183, 1998.

[6] S. Kourtis, "Optimum bit allocation algorithm for DMT-based systems under minimum transmitted power constraint," *Electronic Letters*, vol. 35, pp. 2181-2182, 1999

[7] S. Haykin, *Adaptive filter theory,* 4th edition, Englewood Cliffs (NJ), Prentice Hall, 2001

[8] Asymmetric digital subscriber line (ADSL) transceivers, ITU-T G.992.1, June 1999